KAWAI Synthesizer-100F

Owner's Manual

INTRODUCTION

Thank you for your purchase of synthesizer model 100F. It has been designed to create an endless versatility in sounds and will provide you with the years of musical enjoyment. Capability of creating the completely new sounds by your own way is another unique feature of your instrument.

The basic purpose of this synthesizer is to allow you to demonstrate your own creativity and to deepen your self expression. The challenge is yours and entertain yourself in the new dimension of sounds.

This manual will acquaint you with all the fascinating features of your synthesizer and we trust you will add your playing pleasure following the instructions contained.

CONTENTS

1. Theory of operation 3
2. Connection with External Amplifier and Speaker 4
3. Description of each Function ..... 4~10

3-1 VCO 4
- a. Tuning and Pitch Range
- b. Waveform Selector and Sound Source Selector
- c. Function of LFO on VCO
- d. Delay Vibrato
- e. Portamento

3-2 VCF 7
- a. HPF
- b. VCF
- c. Function of VCO Sound Source on VCF
- d. Function of Expression Pedal on VCF
- e. Function of LFO on VCF
- f. Function of ENV I on VCF

3-3 VCA 8
- a. Gain Controller
- b. Function of KYBD and ENV II on VCF

3-4 Envelope Generator 8
- a. Envelope Selector and Controller
- b. Function of ENV II on VCA
- c. Function of ENV I on VCF
- d. Function of Envelope Generator on VCO
- e. KYBD TRIG and LFO TRIG

4. Basic Method of Sound Producing ..... 11~17

4-1 Flute Family Tone 11
4-2 String Family Tone 13
4-3 Brass Family Tone 14
4-4 Repeated Tone 15
4-5 Percussion Tone 16
4-6 Noise Family Tone 17

5. Various Ways to use 100F ..... 18~19
6. Registration Guide ..... 20~24
7. Specifications 25
8. Index 26

1. Theory of operation

Selectors and Controllers on the panel are devided by line depending on their function for clear reference and easy performance. For better understanding, the panel is transcribed in the following diagram. (Fig. 1)

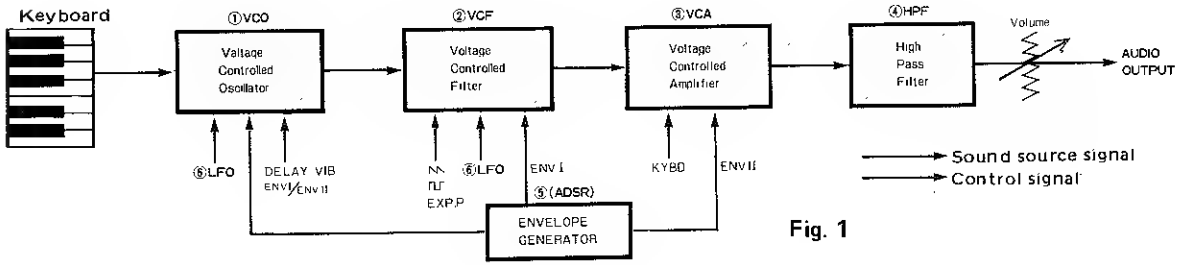

Fig. 1

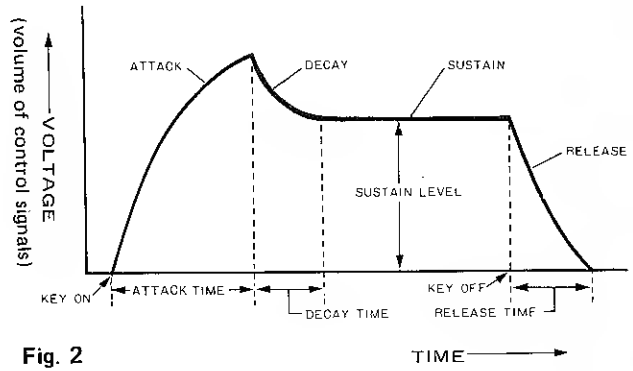

Fig. 2

● Flow of Sound Source Signal

A sound source signal is produced by the Voltage Controlled Oscillator (VCO) ①, shaped by the Voltage controlled Filter (VCF) ②, amplified by the voltage Controlled Amplifier (VCA) ③, fed to the High Pass Filter (HPF) ④, controlled its volume by the Volume Controller with the red knob, then drived from the Audio Output on the rear panel. By adding various control signals (shown in orange lines) to these VCO ①, VCF ②, and VCA ③, you will create different sounds.

● Operation of each Function

1 VCO

This is the oscillator which produces the sound source signal of the Synthesizer.
On the 100F, the pitch of the VCO can be controlled by three control signals produced by the Delay Vibrato, LFO and Envelope Generator.

2 VCF

This is the filter to change the sound timbre.
On the 100F, the sound timbre can be controlled by five different control signals of ⩘,⊓, Exp. P, LFO and ENV I.

3 VCA

This is the amplifier which controls the volume of the sound signal at its attack or decay time.
On the 100F, the volume can be controlled by two different control signals such as the Keyboard (KYBD) and the ENV II.

4 HPF

This is used when you wish to harden the sound signal derived from the VCA.

5 Envelope Generator (ADSR)

Generally with a Synthesizer, you can easily change the pitch, the timbre and the volume of the sound from the moment a key is depressed to create a sound untill it decays and fades away after the key is released. This variation of the sound along with time can be exchanged by the Envelope Generator.

Fig. 2 shows its form. Upon depressing a key, the voltage of the Envelope Generator rises gradually from zero to a certain point. The time required for this stage is called ATTACK TIME. Then the voltage decays gradually to the point predetermined. This is called SUSTAIN LEVEL. The time spent for this part is OECAY TIME. The voltage is kept at the SUSTAIN LEVEL while the key is kept depressed, but it drops gradually when the key is released. The time required for this interval is called RELEASE TIME.
The Envelope Generator controls ATTACK TIME, OECAY TIME, SUSTAIN LEVEL and RELEASE TIME from the beginning to the end of a sound. This cycle is generally called AOSR taking the initial letter of each word.

6 LFO

This is a kind of oscillator which produces very low frequency. On the 100F, it works on he VCO and the VCF, and changes the pitch and the timbre of the sound.

2. Connection with External Amplifier and Speaker

Connect the 100F to a tone reproducing equipment. The sound quality may be changed by the type of equipment. The list on the right shows the general connection between the Audio Jacks on the rear panel of the 100F and the connection devices of various equipments.

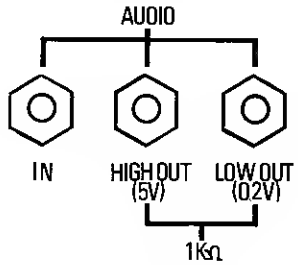

Fig. 3

	Rear Panel (Audio Jack)	To Reproduction Equipment
Output Signal	HIGH OUT	Input Jack of an Organ Auxiliary Jack of a Stereo System Line In Jack of a Tape Recorder
	LOW OUT	Input Jack of a Guitar Amplifier Mic In Jack of a Tape Recorder Mic, Guitar Input Jack of an Organ
Input Signal	IN	Extension Jack of an Organ

3. Description of each Function

3-1 VCO

The pitch of the VCO is controlled by the control signal (voltage) applied to it. On the 100F; TUNE, RANGE, LFO, PROTAMENTO and ENVELOPE GENERATOR are provided as controllers or selectors to change the voltage fed to the VCO. Set all the controllers and selectors to match the positions shown in Fig. 4, then play on the keyboard. It will give you the 8 feet pitch sound which is equivalent to the pitch of pianos or organs.

a. Tuning and Pitch Range (Fig. 5)

Tuning the 100F with another musical instruments can be done by moving the VCO TUNE slider, located on the upper centre of the panel, up and down. The RANGE is the transposer to shift the pitch octave by octave. By turning it to RANGE 4, the entire pitch is shifted to 4 feet which is one octave higher; and to RANGE 2, it is shifted to 2 feet range. On the other hand, by turning it to RANGE 16, the pitch is shifted down by one octave from 8 feet to 16 feet, and to RANGE 32 and 64, it is shifted down by one octave each in sequence. On LOW RANGE, the VCO oscillates so low frequency (the lowest is about 0.3 Hz) that you can hear the sound only intermittently. This LOW RANGE is often used to control the VCF. (See P.7) Following is the list which shows the general relation between each range and various musical instruments.

RANGE	Musical Instruments	RANGE	Musical Instruments
2 feet	Reed, Whistle, Grocken-Spiel	16 feet	Horn, Marimba, Cello
4 feet	Piccolo, Violin	32 feet	Tenor Sax, Trombone
8 feet	Flute, Viola, Clarinet	64 feet	Tuba, Contra-bass

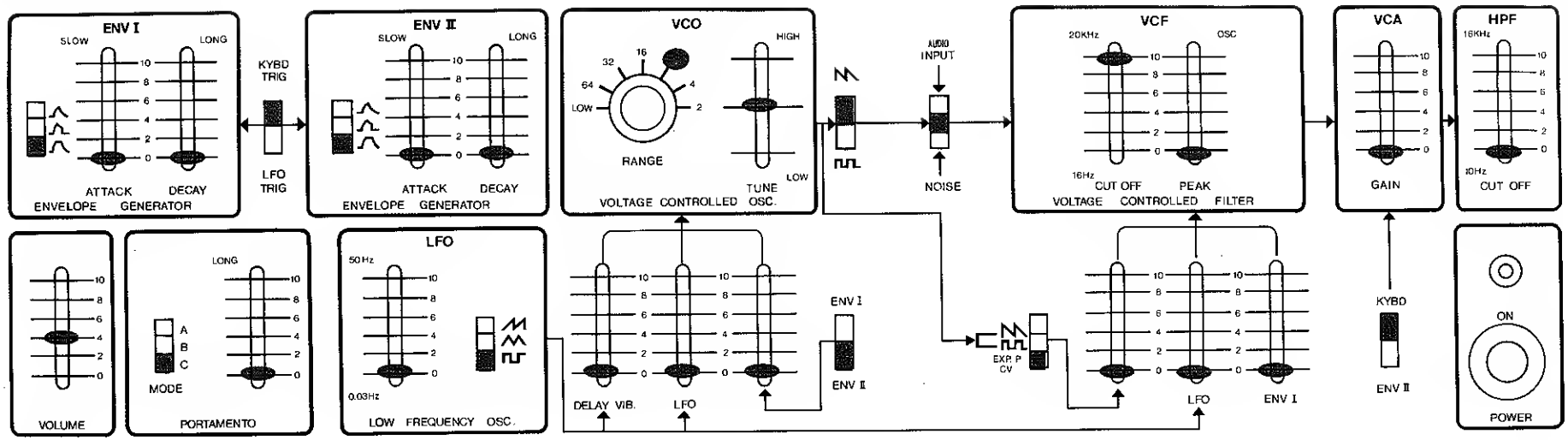

Fig. 4

b. Wave form Selector and Sound Source Selector (Fig. 6)

The selector placed on the right hand side of the VCO TUNE is the Wave form Selector. The VCO produces two different wave forms. One is called sawtooth wave (⋀⋀) which contains all the harmonics useful to create most of the musical instruments sound. The other is called square wave (⊓⊓) which consists of only odd (1, 3, 5,....) harmonics and is suitable for creating some characteristic musical instruments sound such as a clarinet.

The sound source signal fed to the VCF is selected by the Sound Source Selector which is placed on the right hand side of the Wave form Selector. When it is set in the middle, it transmits the sound source signal of the VCO. When it is to NOISE, the white noise signal is obtained. The noise signal is often used to create sound effects such as wind or wave beating on the seashore. When the Sound Source Selector is set to AUDIO INPUT, an external input (organ etc.) can be used for the sound source of the VCF.

In case creating the sound utilizing the oscillation of the VCF (See P. 7), the sound will be distorted if the signal of the VCO or the NOISE is mixed to it. To avoid the distortion, put the Sound Source Selector to AUDIO INPUT. In this case, disconnect the external sound source from the AUDIO INPUT JACK.

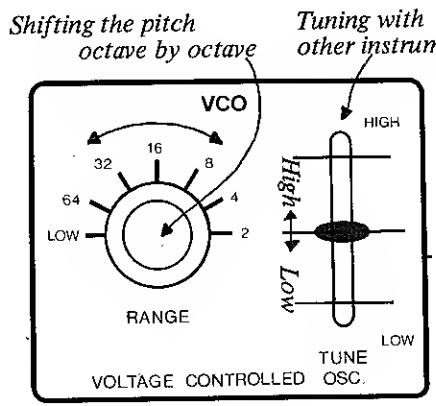

Fig. 5

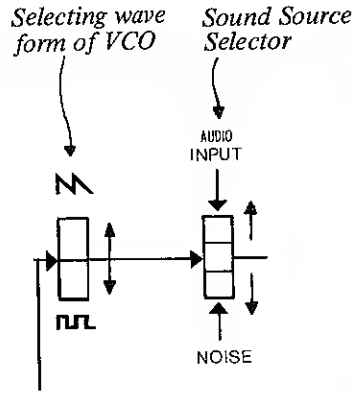

Fig. 6

c. Function of LFO on VCO (Fig. 7)

Your 100F provides the Low Frequency Oscillator (LFO) which controls the VCO and the VCF.
Set the 100F back to the state of Fig. 4. Then set the LFO Controller Ⓐ, placed on the lower left centre of the panel, to LEVEL 2, then depress a note on the keyboard. If you raise the LFO Controller Ⓑ, while holding the key down, the pitch will rise and fall periodically. As you raise the controller upwards, the fluctuation of the pitch is increased. When the Controller is all the way up, only the lower pitch sound is heard intermittently. This means that the higher frequency becomes beyond audible (usually above 20kHz). In this state, if you raise the LFO Controller Ⓐ, the speed of the intermittent sound (repeat speed) becomes faster. If you lower the Controller, it becomes slower. The speed can be changed continuously from 0.03 Hz to 50 Hz.
The LFO of the 100F produces three different output wave forms, sawtooth(/\/\), triangle (/\/\) and square(⊓⊔⊓).These wave forms can be selected by the LFO Waveform Selector.
When the square wave is fed to the VCO, the pitch alternates between high and low, therefore marimba like sound can be created. The triangle wave changes the pitch continuously, so this is used to obtain the Vibrato Effect. When the sawtooth wave is selected, the pitch rises continuously then suddenly falls down from a certain point to the original low level. This wave form, therefore, can be used to make the water dripping tone for instance. Try out various changes in wave forms or speed.

Fig. 7

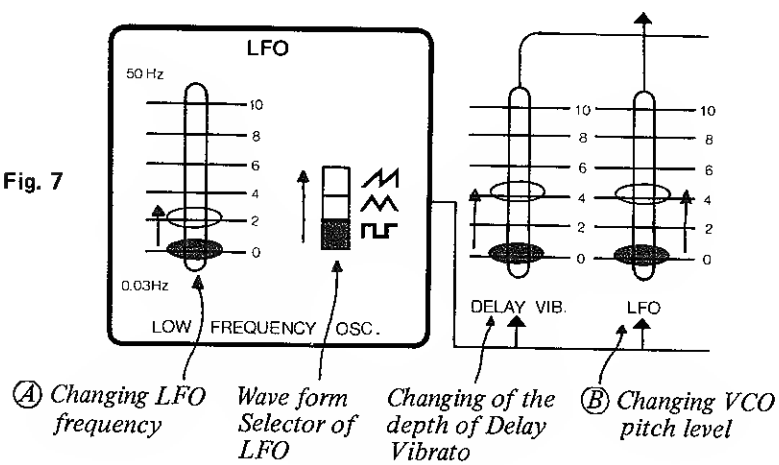

d. Delay Vibrato

The Delay Vibrato is the effect to obtain the vibrato a little while after a key is depressed. The Delay Vibrato is often used for string instruments sound such as a violin or a cello to provide an extra reality to the sound.
Set the LFO Controller Ⓐ to LEVEL 4, and the LFO Waveform Selector to triangle wave, then move the DELAY VIB Controller. You will notice that the Delay Vibrato effect is obtained. The effect becomes deeper as your raise the Controller.

e. Portamento (Fig. 8)

The Portamento is the effect of sliding change of the pitch while a note played is shifted to another on the keyboard.
Set the PORTAMENTO Controller, placed on the lower left side of the panel, to LEVEL 10. Then depress the lowest note "C".
Holding the key down, depress the highest note "C". You can hear the pitch rises continuously. Then release the highest note "C". The sliding fall of the pitch is recognized.
The MODE selector gives different Portamento effects being related with the ways of depressing keys.

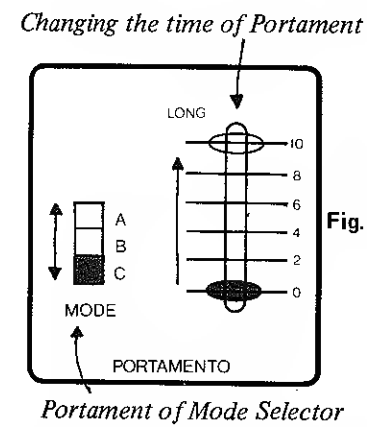

Fig. 8

When the MODE Selector is at A, the Portamento is obtained at both staccato (discontinuous playing of notes on the keyboard) and legato (continuous playing). (Fig. 9 (a) (b)).
When the MODE Selector is at B or C, it is obtained only at the legato palying. (Fig. 9 (b) only). However, when the MODE Selector is at C, the Envelope Generator is operated by the legato playing. This is noticed by setting the Pitch Control Selector of the VCO (Page. 9) to ENV II, and the Envelope Selector of the ENV II to ADR(/\) or AD(/\), and playing notes leagto on the keyboard. Regarding the function of the ENV II, refer to Page 9.

Fig. 9

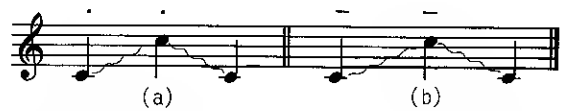

3-2 VCF

On the 100F, there are provided the VCF and the HPF which modify timbre of the sound signal sent from the sound source.
Set the 100F again according to Fig. 4.

a. HPF (Fig. 10)

Holding a key down, slowly raise the HPF Controller, located at the upper right hand corner of the panel. Higher frequencies are picked up gradually, and the tone becomes harder. You can catch it more clearly by switching the sound source to NOISE, then move the controller in the same way. The HPF allows only frequencies higher than a certain point to pass. When the controller is set at the bottom, it passes frequencies above 10Hz; and at the top above 16 kHz.

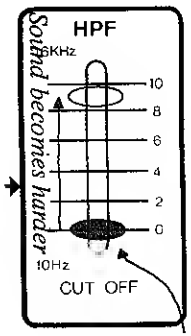

Fig. 10

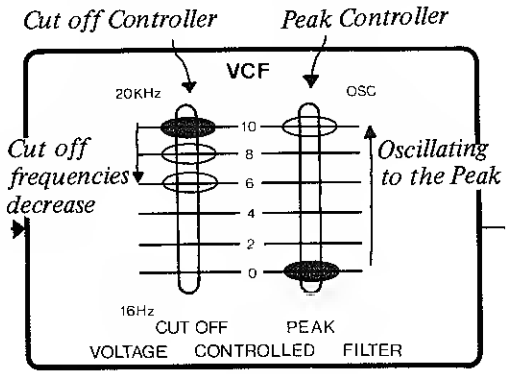

Fig. 11

b. VCF (Fig. 11)

From the setting of Fig. 4, lower the Cutoff Controller of the VCF slowly. The sharp sound with rich harmonics will gradually become soft sound with less harmonics then finally fades away.
(Switch the Sound Source Selector on NOISE and try that again).

In other words, the VCF works as a Low Pass Filter (LPF) which induces to pass the frequencies lower than certain point (Cutoff frequencies) and cuts off all the higher frequencies. The Cutoff Controller changes the level of the cutoff frequency.
Next, set the Cutoff Controller around LEVEL 6, then raise the Peak Controller. High frequency will be emphasized by degrees to the point it oscillates the sound "Peak".
Utilizing such a variation of oscillating sound, special effects like a bird singing can be produced.
Now, setting the Peak Contoller around LEVEL 6, then move the Cutoff Controller up and down. It is noted that the frequency to be emphasized is changed by this. (See Fig. 12)
On the 100F, the VCO can be controlled by the VCO Source Wave, Exp. P., and ENV I.

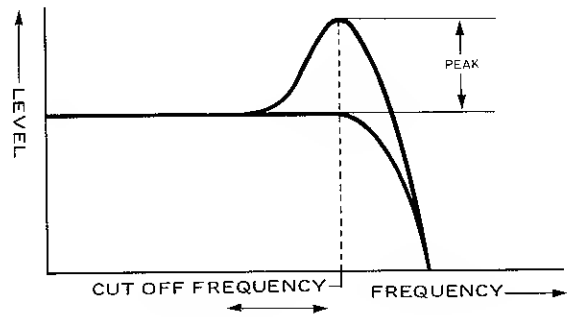

Fig. 12

c. Function of VCO Sound Source on VCF

Set the Cutoff Controller to 5, the Peak Controller to 10, then raise the VCF Controller followed after the VCO Sound Source Wave form and Exp. P. Selector. The cutoff frequency moves higher. Now, set the VCO RANGE to LOW and the VCF Control Selector in the middle(⊓⊔), then raise the VCF Controller. The cutoff frequency of the VCF moves up and down alternately. When the VCF Control Selector is switched to the top(⋀⋀), the cutoff frequency changes taking a shape of its wave form(⋀⋀). The speed of the variation can be controlled by both TUNE and the keyboard.

d. Function of EXP.P. on VCF

The VCF can be controlled by the optional Expression Pedal. When using the Exp. P., switch the VCF Control Selector to Exp. P. CV. (Fig. 13) As you step on the Expression Pedal, the cutoff frequency becomes higher, thereby the Wow effect is obtained.

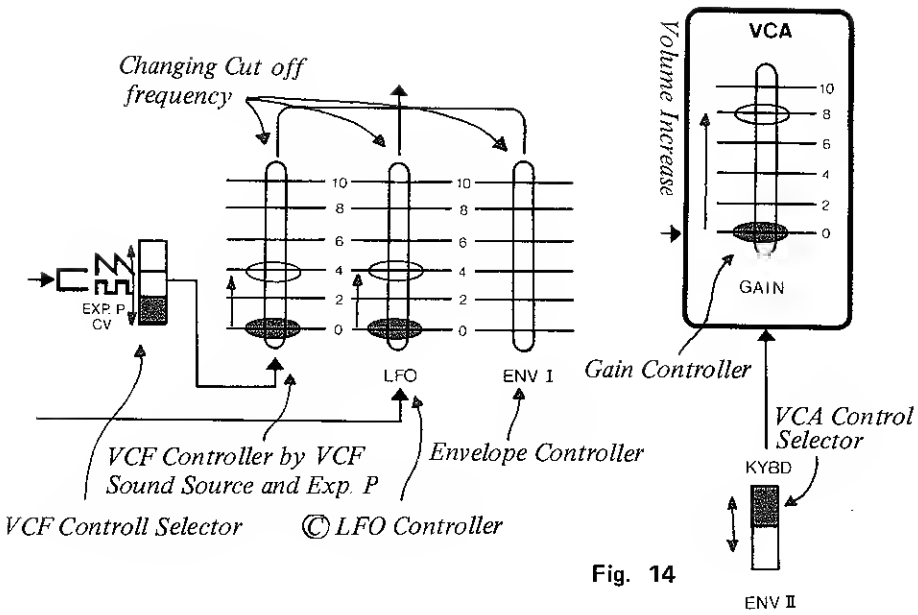

Fig. 14

e. Function of LFO on VCF (Fig. 13)

Set the Cutoff Controller at LEVEL 6, raise the LFO Controller ©. The cutoff frequency of the VCF rises gradually. Then raise the oscillation frequency of the LFO (See Fig. 7). You can hear the cutoff frequency moves up and down. By switching the Sound Source Selector to NOISE, make the sound of SL with operating the Cutoff Controller, LFO Controller © or LFO Waveform Selector.

f. Function of ENV I on VCF (Fig. 13)

Set the Cutoff Controller between LEVEL 4 and 8, then raise the Envelope Controller. You can see the VCF cut off frequency moves higher. This movement can be controlled by the ENV I located at the upper left corner of the panel.
Try out various state of cutoff or peak by handling the ENV I Controller or the MODE Selector.
Refer to the paragraph of the Envelope Generator to find out the function of the ENV I.

3-3 VCA

The volume of the sound signal transmitted from the VCF can be changed by the amplifier called VCA. As the control signal (voltage) fed to the VCA increases, the volume of the sound signal becomes larger.
Repeat the setting as Fig. 4 again.

a. Gain Controller

As you raise the Gain Controller (Fig. 13) located at the upper right of the panel, the voltage fed to the VCA increases and the sound begins to come out, then gradually becomes larger. If a note is depressed on the keyboard at this state, the pitch of the sound is shifted to that corresponding to the note and held there.

b. Function of KYBD, ENV II on VCA (Fig. 14)

Lowering the Gain Controller back to zero level, turn the Control Selector of the VCA to KYBD (Keyboard). Under this state the sound comes out only while the key is kept depressed. This time, the volume stays on the same level without change.
When the Selector is switched to ENV II, the volume can be changed by the controll signal fed to the VCA. Refer to the paragraph of the Envelope Generator about the function of the ENV II.

3-4 Envelope Generator

The 100F contains two Envelope Generators (ENV I, ENV II).
The ENV I controls the VCO and the VCF, while the ENV II controls the VCO and the VCA.

a. Envelope Selector and Controller (Fig. 15)

For the easier operation of the Envelope Generator, it is divided into three patterns. These patterns are ADR (⌒) which controls the Attack, Decay and Release; AD (⌒) which controls the Attack and Decay; AR (⌒) which controls the Attack and Release. Each of these can be selected by the Envelope Selector. Also the Attack Time can be controlled by the Attack Controller, while the Decay and Release Time by the Decay Controller.

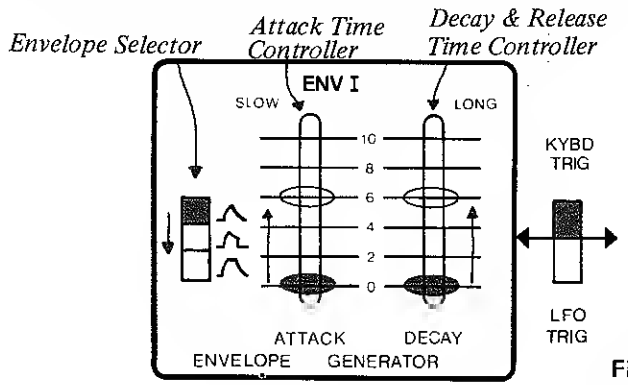

Fig. 15

b. Function of ENV II on VCA

Set all the controllers and selectors as shown in Fig. 4. Then switch the VCA Control Selector (Fig. 14) to ENV II, and the Envelope Selector of the ENV II to ADR(⌒⌒). Under this setting, while depressing a key, raise the Attack Controller to find the Attack Time becomes longer. Then raise the Decay Controller to see the sound gradually becomes smaller and fades away. When you release the key at halfway through, the sound begins to decay from that point. As you raise the Decay Controller, the Decay Time becomes longer.
This ADR pattern can be used to create a sound like a guitar or a harpsichord.
When the Envelope Selector is switched to AD(⌒⌒), you will notice the volume of the sound will be changed at its Attack and Decay by depressing a key. On AD, the volume of the sound rises as you depress a key then it decays. If you release the key at halfway through, the sound will be cut off immediately. Therefore, this is useful to create a sound like a piano. Switch the Envelope Selector to AR(⌒⌒), and depress a key. Now the volume is kept at certain level until it starts to decay by releasing the key. The effect that the sound decays after the key is released is called "Sustain" on an electronic organ but it is called "Release" on a synthesizer. This AR is used for producing a continuous sound like an electronic organ or a violin.

c. Function of ENV I on VCF (Fig. 16)

On your 100F, the cut off frequency of the VCF can be changed by the ENV I.
Set back all the controllers and the selectors as Fig. 4, then set the Cutoff Controller of the VCF (Fig. 11) at LEVEL 6. As you raise the ENV I Controller which controls the VCF, you hear a gradual rise of the cutoff frequency. Now set the ENV I Controller to top (LEVEL 10), and switch the Envelope Selector of the ENV I to ADR(⌒⌒). Then raise the Attack Controller and depress a key. The cutoff frequency rises gradually to the level which has been set by the Controller of the ENV I, and immediately falls down to the original cutoff frequency. If you lower the Decay Controller, the cutoff frequency falls down gradually.
Upon switching the Envelope Selector to AD(⌒⌒), you can change the cutoff frequency by the Attack and Decay Controllers of the ENV I. This time, there is no change of the sound after the key is released.
When you switch the Envelope Selector to AR(⌒⌒), cutoff frequency rises gradually then keeps a certain level. When you release the key, the cutoff frequency falls down gradually. To check this process, operate the VCA by the ENV II.

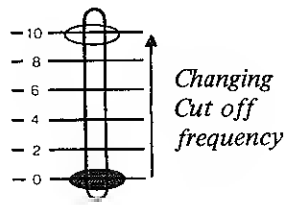

Fig. 16

d. Function of Envelope Generator on VCO (Fig. 17)

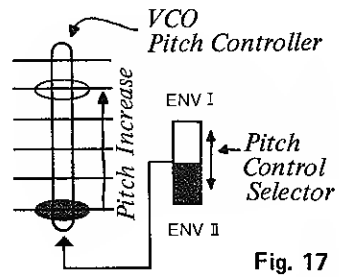

Fig. 17

On your 100F, the pitch of the sound can be controlled by two Envelope Generators (ENV I and ENV II).
If you set back all the controllers and the selectors according to Fig. 4, and raise the Pitch Controller of the VCO, the pitch will increase.
In this case, the Envelope Selector of the ENV II is on AR(⌒⌒). Therefore, by raising the Attack and Decay Controller and depressing a key, the pitch rises gradually and keeps the level which has been set by the Pitch Controller of the VCO. When you release the key, it gradually falls back to the original pitch (zero level pitch of the VCO Pitch Controller). To have the variation of the pitch during this Release Time, set the Control Selector of the VCA to ENV II.
By switching the Envelope Selector of the ENV II to ADR(⌒⌒), you can control the Attack, Decay and Release Time which are the control signals (voltages) to the VCO, thus obtaining the pitch variation.
By the ENV I, you can also control the pitch in the same way as by the ENV II. In this case, switch the Pitch Control Selector of the VCO to ENV I.

e. KYBD TRIG and LFO TRIG (Fig. 18)

The Selector of KYBD TRIG and LFO TRIG, located at the upper left side of the panel, determines to let the Envelope Generator operate with either the keyboard or the output wave form of the LFO.

Set all the controllers and selectors of your 100F to match the settings of Fig. 18. In this state, the VCA is being controlled by the ENV II and the Envelope Selector of the ENV II is on ADR(⌒), therefore a wave form of a sharp rise and immediate decay shown in Fig. 19 (a)-1 is obtained. This time, by depressing a key, only the wave form of (a)-1 is obtained.

Now, switch the Operation Selector of the ENV I to LFO TRIG and depress a key. Wave forms like Fig. 19 (a)-1,2,3, are obtained continuously. This is because the start of operation of the ENV I, II is repeated at every double oscillation frequency of the LFO (indicated by arrow marks shown in Fig. 19 (b)) as you depress the key. The repeat speed is controlled by changing the oscillation frequency of the LFO. The LFO TRIG is used for creating a repeated tone like a mandolin or a marimba.

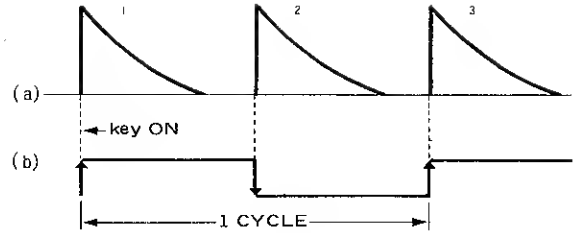

Fig. 19

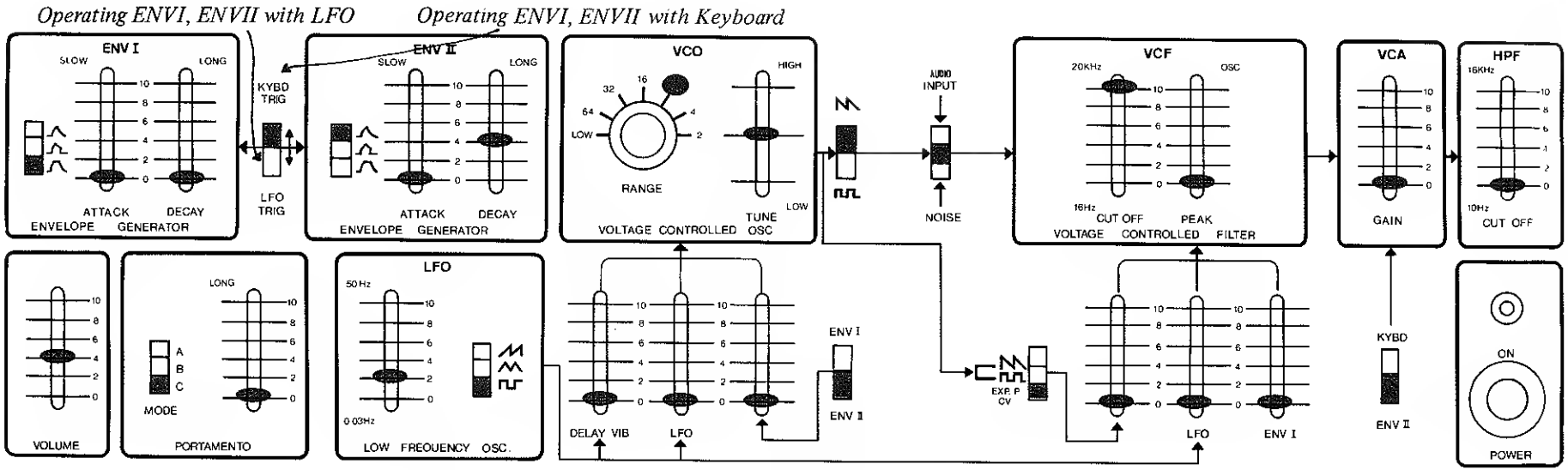

Fig. 18

4. Basic Method of sound Producing Sound

Following all the given instructions, let's produce actual sounds. The most important point in producing a sound is to well acquaint with the characteristics of the sound which you are creating.

We suggest you will analyze the pitch range, tone color, changes of pitch at the attack or the decay, and study which selectors and controllers are most applicable in order to obtain the character of the sound. Please refer to the fundamental methods in the following pages. Further you will find many more variations are created by your own method.

4-1 Flute Family Tone (Fig. 20)

The character of this tone family, as represented by Flute, is soft and contains few harmonics.

(1) Selecting the Pitch Range and the Sound Source Waveform

The compass of a flute is equivalent to the middle range of a piano. So, set the VCO Pitch Range to 8 feet. The sound of a flute contains strong fundamental tone (the tone with the basic pitch of the sound) and few overtones beyond the second harmonics (the tone of one octave higher than the basic pitch). The sawtooth wave which contains all the integral (1,2,3,...) harmonics is used for the sound source.

(2) Arranging the Sound Timbre

Since the flute sound contains very few harmonics, it is necessary to cut high overtones by lowering the cutoff frequency of the VCF. Set the sound soft with less harmonics by adjusting the Cutoff Controller and the ENV I Controller. It is unnecessary to emphasize the frequency around the cutoff point, therefore fix the Peak Controller at LEVEL 0. In this case, as you are adjusting the tone timbre while listening, move up the VCA Gain Controller.

(3) Setting the Tonal Change during its Attack and Decay Period

The sound of a real flute has comparatively few overtones at its attack period (the beginning of the play), then gains a slight increase of them. Such a tonal change by time can be controlled by the ENV I. Set the Envelope Selector to AR (⌐\) and adjust the tonal change at its attack and decay period.

(4) Setting the Volume Change during the Attack and Decay Period

Consider how the volume changes when you play a real flute. At the beginning, there is a gradual increase in volume and the rest it maintains the same level till you stop blowing. This volume change (envelope) can be made by controlling the VCA with the ENV II. Set the Gain Controller of the VCA at LEVEL 0, then the Envelope Selector of the ENV II to AR (⌒), and shape the envelope by the Attack and the Decay Controllers.

(5) Setting the Portamento and the Delay Vibrato

When you play a real flute, there is also a subtle variation in the pitch. When a sound move to another, for instance, the pitch may have a sliding change. And also there is a subtle Vibrato in the sound.
Therefore, by adding the pitch shift utilizing the Portamento or the Delay Vibrato, you can create more realistic sound. Other flute family tones (piccolo etc.) have similar features. Try out various flute family tones.

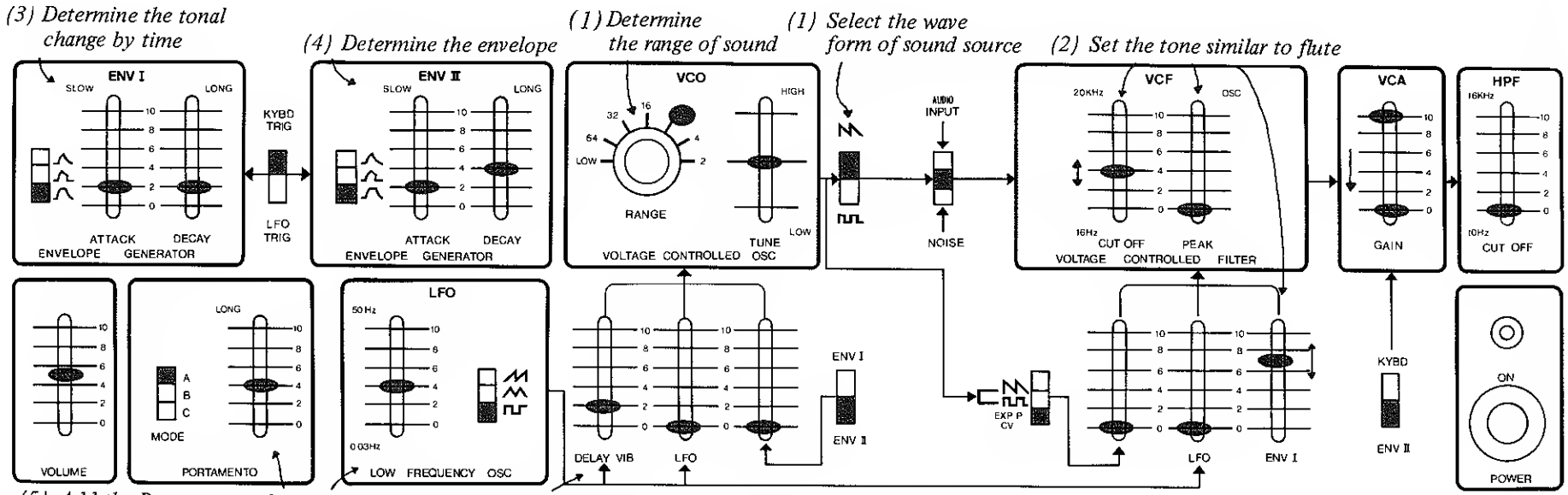

Fig. 20

4-2 String Family Tone (Fig. 21)

This is a string family tone such as a violin or a cello. The rich overtones and the distinctively strong fundamental tone are the characteristics of this tone.
Let's try out the sound of a violin.

(1) Selecting the Pitch Range and the Wave form of the Sound Source

The compass of a violin is equivalent to the treble range of a piano, so the Pitch Range is set on 4 feet.
The sawtooth wave form containing all the harmonics is suitable for the source of the string sound. Set the Wave form Selector of the VCO to Sawtooth.

(2) Selecting the Sound Timbre Arrangement

The violin sound contains pretty high overtones. Listening to the sound, find the sound close to a violin with the Cutoff Controller.

(3) Setting the Volume and the Tonal Change

The volume of a violin increases at the first stage then maintains a certain level. Therefore, set the Envelope Selector of the ENV II to AR(⎍) and adjust the volume during the attack time by the Attack Controller.
Also overtones increase almost equally at the first stage but they take subtle changes constantly during the duration. Create these subtle change of the sound timbre by adjusting the cutoff frequency of the VCF with the ENV I, LFO and VCO Controllers.

(4) Adding the Portamento and the Delay Vibrato

As other features of the violin sound, there are the Portamento and the Delay Vibrato. Add these effects adequately. Finally, adjust the pitch by the Tune Controller.

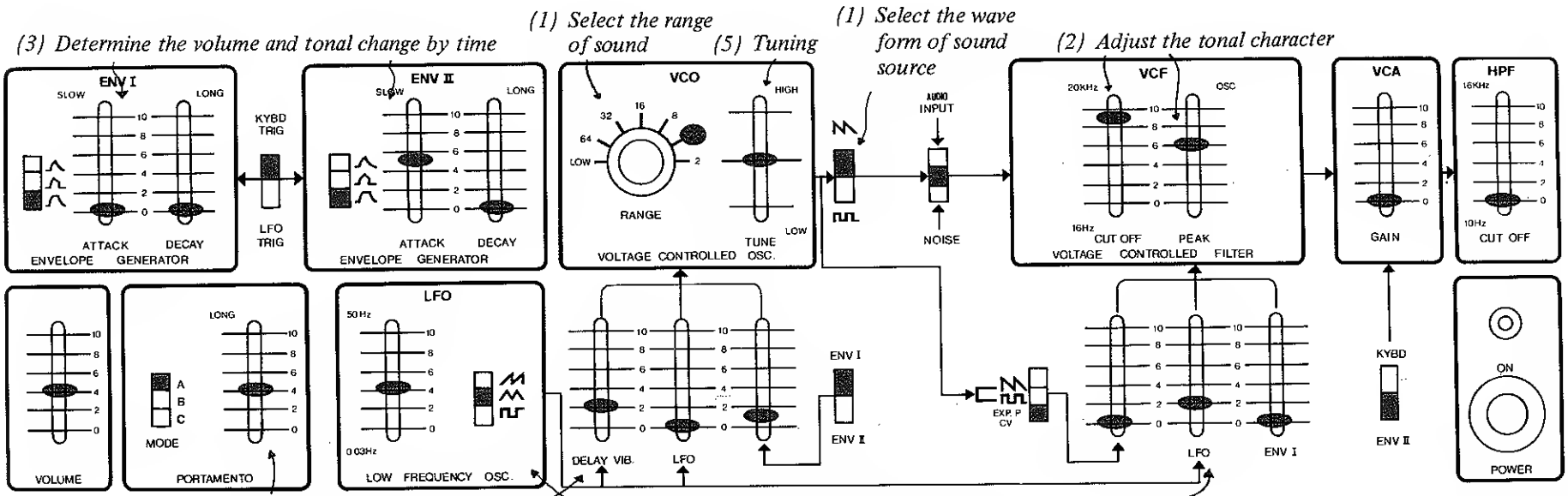

Fig. 21

Brass Family Tone (Fig. 22)

The feature of the Brass Family Tone is in generally stronger overtone than the fundamental tone (the sound of the basic pitch) and there is a bright effect in the sound. Let's create the sound of a trumpet.

(1) The Pitch Range and the Sound Source Wave form

Select 8 feet Pitch Range and the Sawtooth Wave form.

(2) Arranging the Sound Timbre

The trumpet sound is bright and glossy. It has stronger overtones compared to the fundamental tone, therefore the sound is brilliant. To produce such a sound, lower the cutoff frequency of the VCF and emphasize the frequency around the cutoff point by the Peak Controller.
Set the sound close to a trumpet by adjusting the Cutoff Controller and the Peak Controller.

(3) Setting the Variation of the Volume and the Sound Timbre along with Time

The trumpet sound rises sharply then decays gradually. The variation of the volume can be made by controlling the VCA with the ENV II.
The variation of the sound timbre features that the low overtones dominate at the beginning, then overtones are gradually emphasized afterwards.

(4) Others

To give an extra reality to the sound created, add the Portamento or the Delay Vibrato effect.

(5) Wow Trumpet

To obtain the effect of a trumpet being played with a mute (Wow Wow), move the cutoff frequency of the VCF by the LFO. When the mute is attached, the cutoff frequency becomes low, while it is higher without the mute.

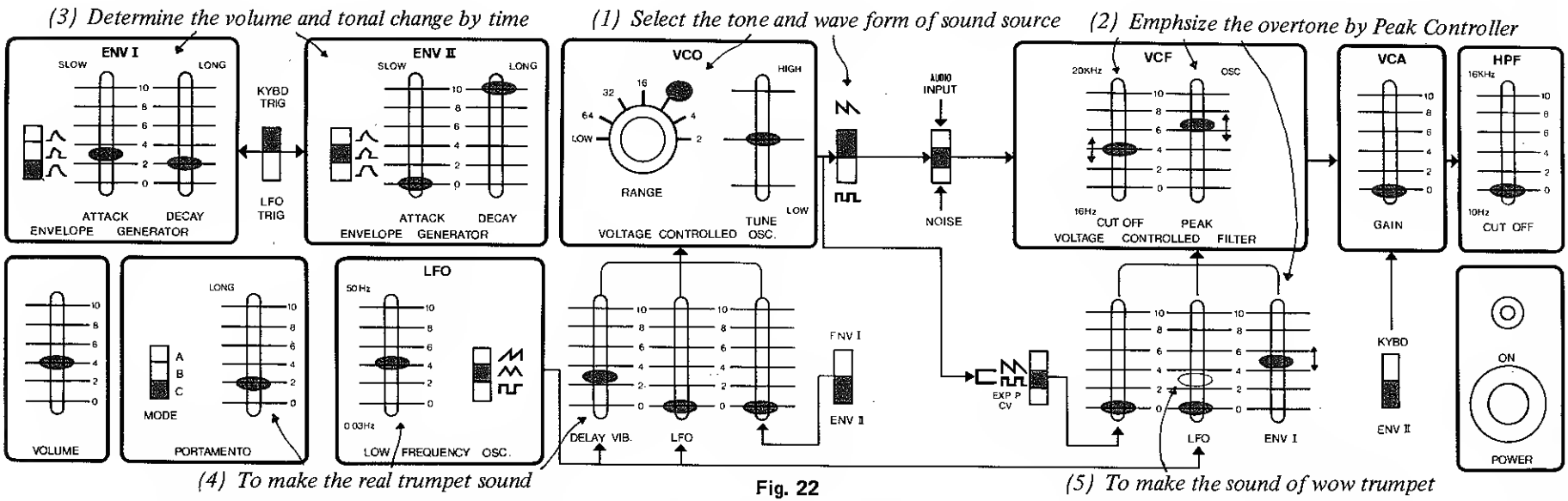

Fig. 22

4-4 Repeated Tone (Fig. 23)

The repeated tone means the periodically repeated tone such as a mondolin or a marimba. Mandolin sound is created by the following way.

(1) The Pitch Range and the Sound Source Wave form

The pitch range of a mandolin is in the middle range and the sound timbre is a sort of string family tone. Set the Pitch Range to 8 feet and the Sound Source Waveform to Sawtooth (⋀⋀).

(2) Finding the Volume and the Sound Timbre

At first, find out the volume and the timbre of the sound with no repeat. That is a sound of a mandolin of which a string is played only once. The volume of the sound rises sharply then decays immediately as you fillip the string. To obtain this volume change, control the VCA by the ENV II. In this case, set the Operation Selector of the VCO to KYBD TRIG, so that the ENV II is operated by the keyboard. After setting the volume change, arrange the sound timbre. The timbre change of the mandolin sound is that the overtones are enormously emphasized at the beginning. This is made by controlling the cutoff frequency of the VCF with the ENV I. In order to obtain the satisfactory change of the sound timbre, adjust the Cutoff Controller and the Peak Controller.

(3) Setting the Repeat Speed

The mandolin tone is the succesive sound chain of this fillipped string. Operate the Envelope Generator by the LFO to make this sequence. To do this, switch the Operation Selector of the Envelope Generator from KYBD to LFO TRIG. Control the repeat speed by the LFO Controller.

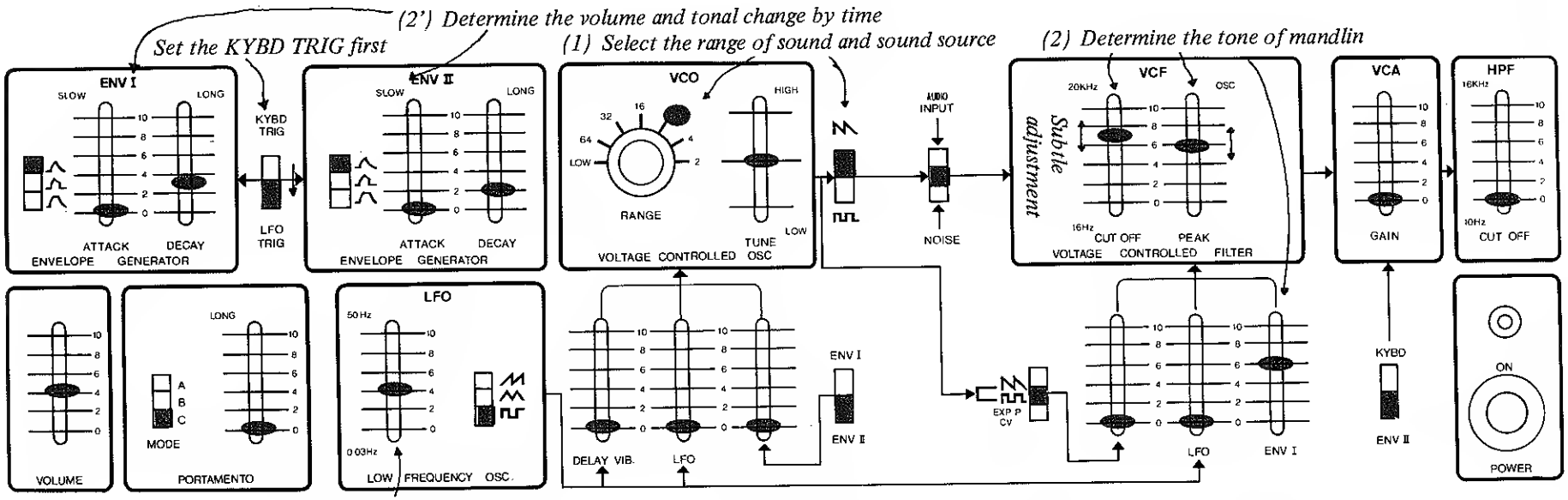

Fig. 23

5 Percussion Sound (Fig. 24)

Among the percussion sounds, there are noise family tones such as a cymbal and ordinary musical scale family tones such as a conga.
Here, let's try out a conga tone.

(1) The Pitch Range and the Sound Source

Select 32 feet for the pitch range of a high conga. As the sound source wave form, select the Sawtooth which contains all the harmonics.

(2) Arranging the Volume Change

First, arrange the changing state of the conga sound. Holding a key down so as to derive the sound out, (raise the cutoff frequency of the VCF), control the VCA by the ENV II. Set the controller and the selector of the ENV II as to obtain a sharp attack and immediate decay at the moment a key is depressed.

(3) Setting the Pitch Change

With a percussion instrument like conga, the pitch changes always from the beginning of the sound to the end. Control the VCO by the Envelope Generator so that the pitch changes from high to low. The pitch change can be made by either the ENV I or the ENV II, however, here we do this by the ENV II.

(4) Selecting the Sound Timbre and its Change

When the changing state of both the volume and the pitch are already set, determine the sound timbre and its change. The sound timbre can be selected by the Cutoff Controller of the VCF and the Peak Controller, while its changing state by the ENV I. The conga tone is comparatively soft with emphasized overtones at its attack period. Adjust each controller carefully till you get a satisfactory result. Use the note "F" in the centre of the keyboard for making the sound.

(5) Others

The actual conga sound decays with a subtle variation of the pitch. Add the Delay Vibrato for the realistic effect. For beating the conga repeatedly, switch the Operation Selector of the Envelope Generator to LFO TRIG in order to operate it by the LFO.

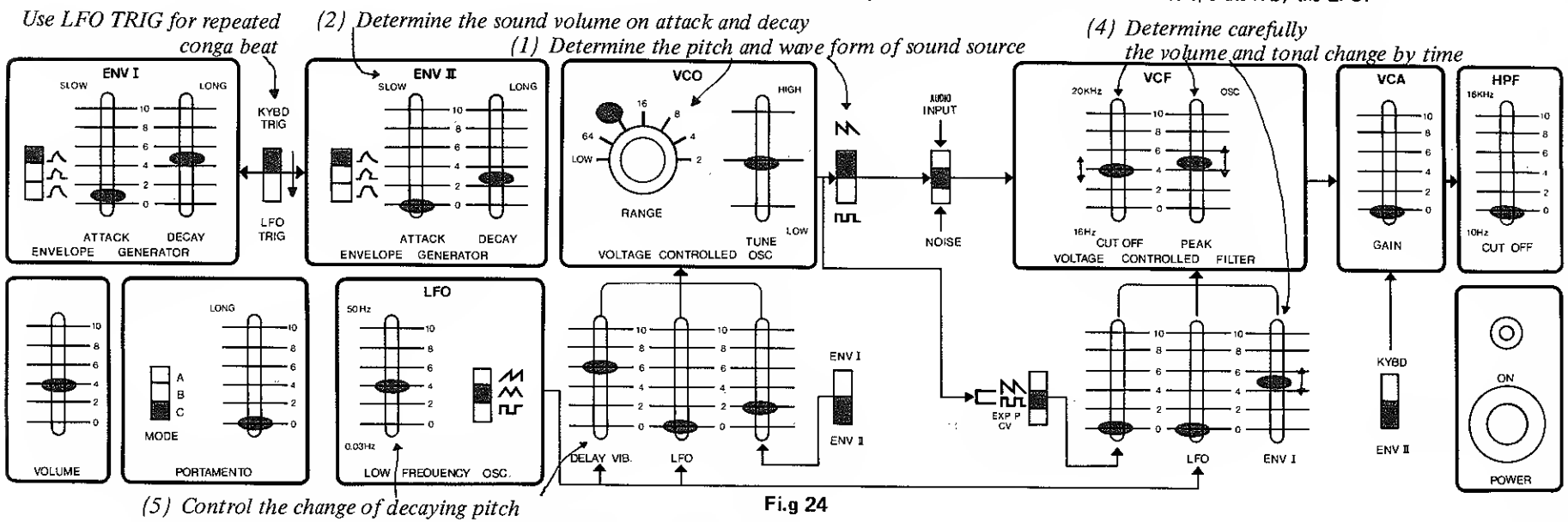

Fig 24

4-6 Noise Family Tone (Fig. 25)

With the Noise Sound Source, you can create the sound of a cymbal or a snare drum as well as various sound effects such as a steam locomotive, wind or wave beating on the seashore. We try here the sound of wave on the seashore.

(1) Selecting the Sound Source

Set the Sound Source Selector to NOISE.

(2) Arranging the Volume Change

In the effect of wave rolling on the seashore, the volume gradually increases then fades down. Set this effect by controlling the VCA with the ENV II.

(3) Arranging the Tonal Change

Set the tone as a gradual rolling and breaking. For this, control the VCF by the ENV I. Adjust the tone so that overtones gradually increase then decrease.

(4) Setting the Effect of Repetitious Rolling

Switch the Operation Selector to LFO TRIG to operate the ENV I and II by the LFO. By lowering down the oscillation frequency of the LFO, you can obtain a effect of slow rolling.

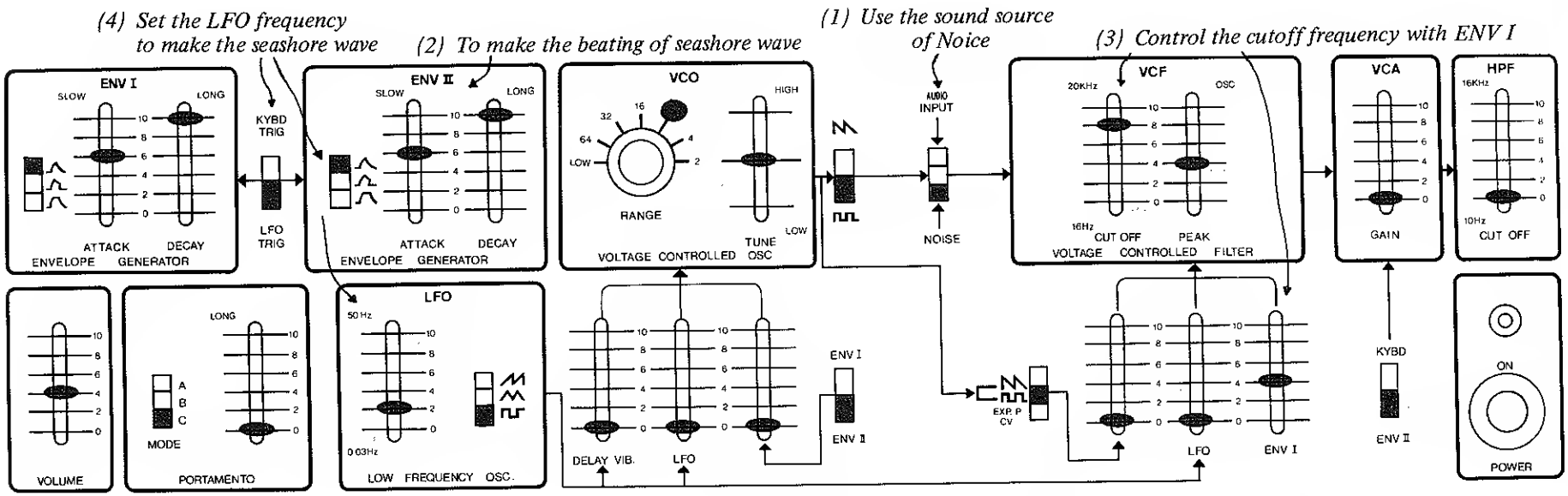

Fig. 25

Various Ways to use your synthesizer

(a) By employing the optional Expression Pedal, the VCF and theVCA can be controlled. Connect it to the Exp.P. Jack (Fig. 26) on the rear panel of the 100F.

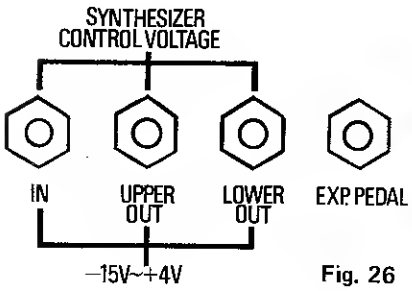

Fig. 26

Expression Pedal

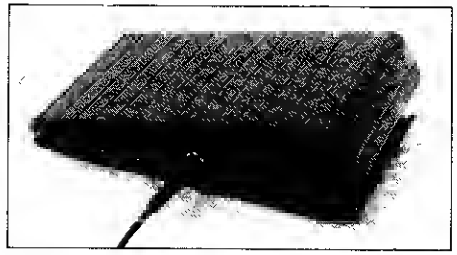

• VCF Control

Switch the Control Selector of the VCF (Fig. 13) to Exp. P. CV, then step on the Expression Pedal. You can get a Wow effect.

• VCA Control

Switch the Control Selector of the VCF (Fig. 13) to either ⊓⊓ or ⋀. The volume can be controlled by the Expression Pedal.

(b) Upon connecting more than one 100F together, you can obtain more than one tone from one note on the keyboard or the composition of the VCO and the Noise Sound Source, thus enabling you to create a wider expression of performance.

(Connection Ex. 1)

Connect the LOWER OUT of the 100F(A) with the SYNTHESIZER IN of the 100F(B). By depressing two notes together on the keyboard of the 100F(A), you can obtain the sound of the 100F(A) from the higher note and the sound of the 100F(B) from the lower note.

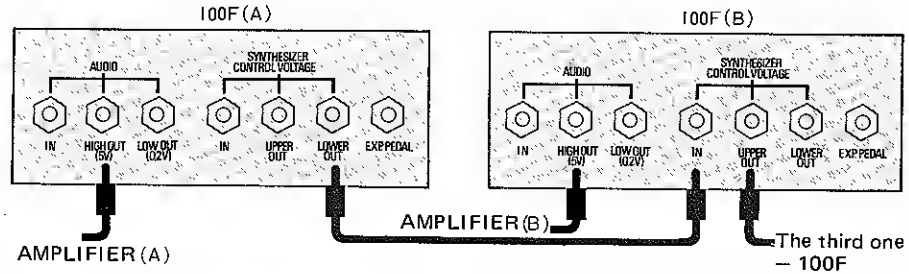

(Connection Ex. 2)

Connect the UPPER OUT of the 100F(A) with the SYNTHESIZER IN of the 100F(B). You can control the 100(B) by the 100F(A), thereby obtaining a synthesizer having two VCO's.

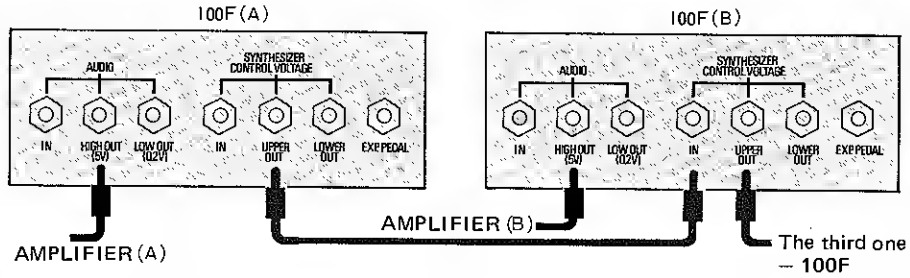

Also in both cases (Ex.1 and 2), when you depress just one note on the keyboard, you can obtain the sound of the 100F(A) and (B) one above another. Upon tuning both sets on the same pitch, a new mixed tone is obtained. A slight difference in these pitches gives you an ensemble effect.
By setting two sets of the 100F as Fig. 27, you can have the effect of Saxophone with breath.

"Saxophone with breath"

100F(A)

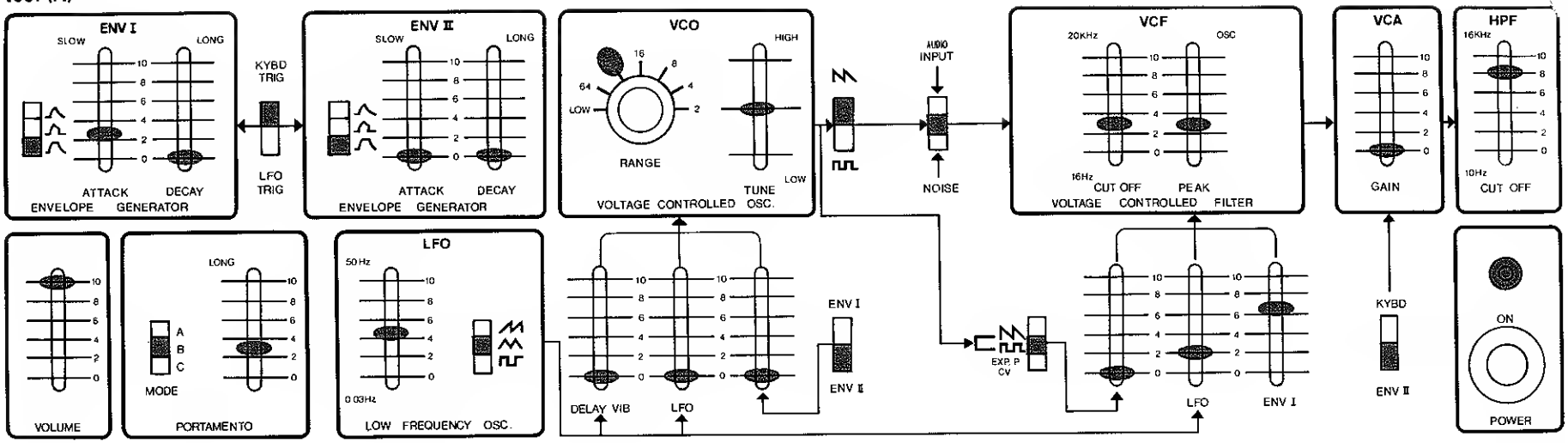

100F(B)

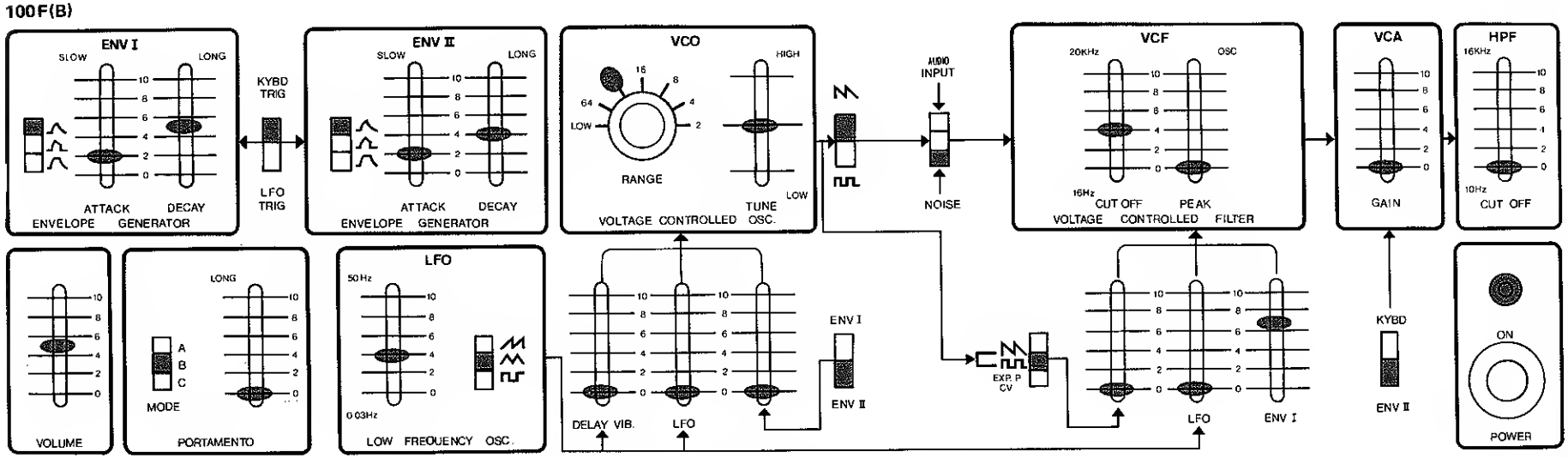

Fig. 27

Connect 100F(A) with 100F(B) as connection Ex. 2 specified on the page 18

6. Registrations Guide

(1) HORN

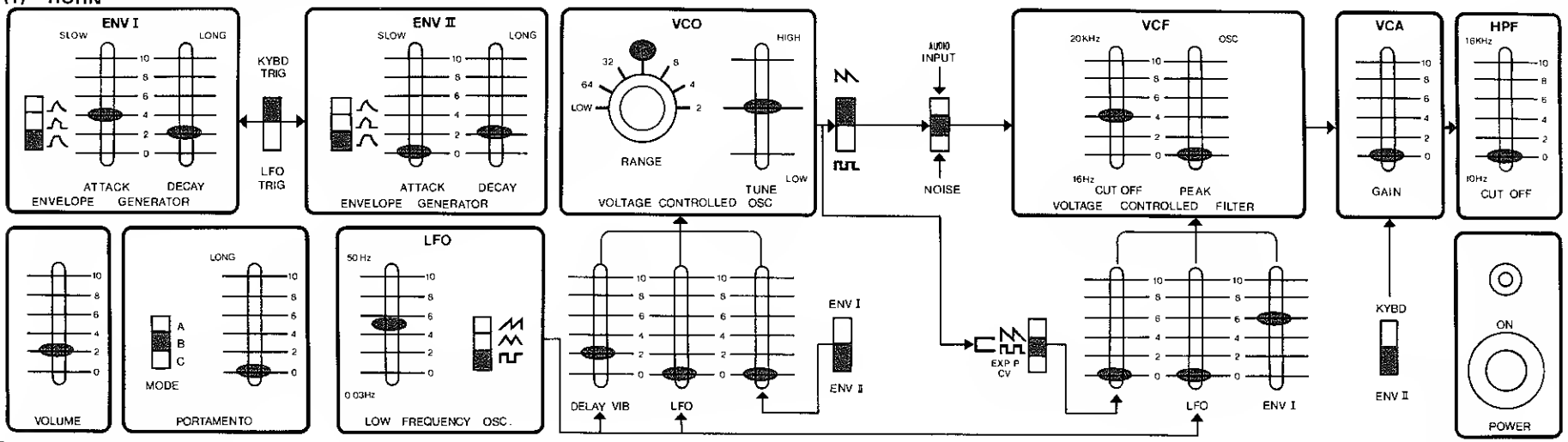

(2) SHAKUHACHI

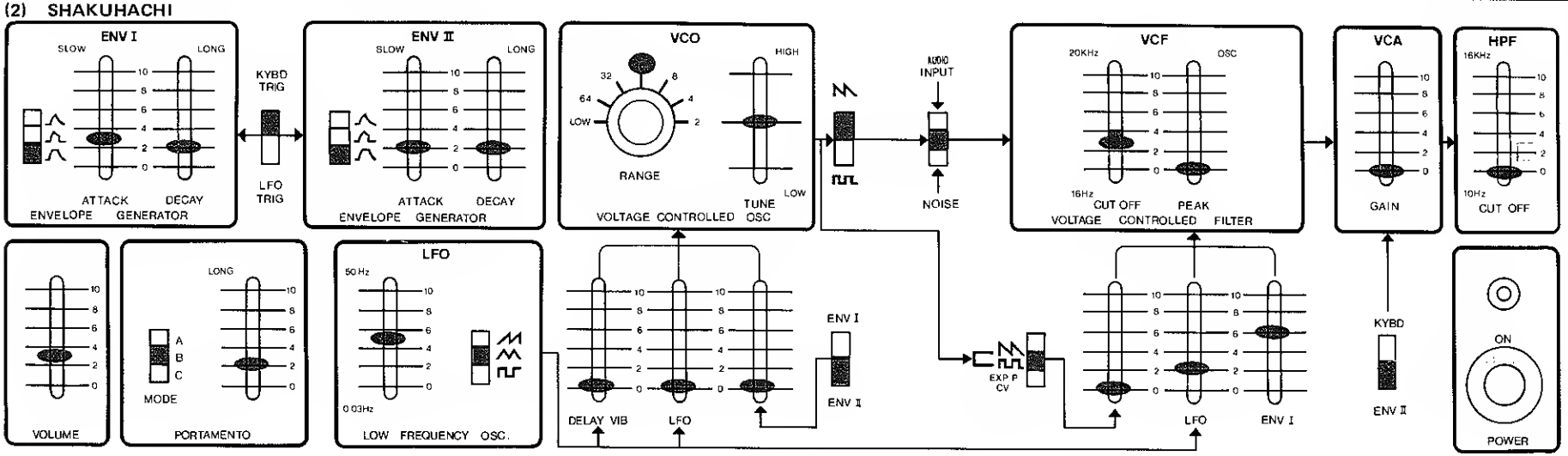

(3) ACCOROION

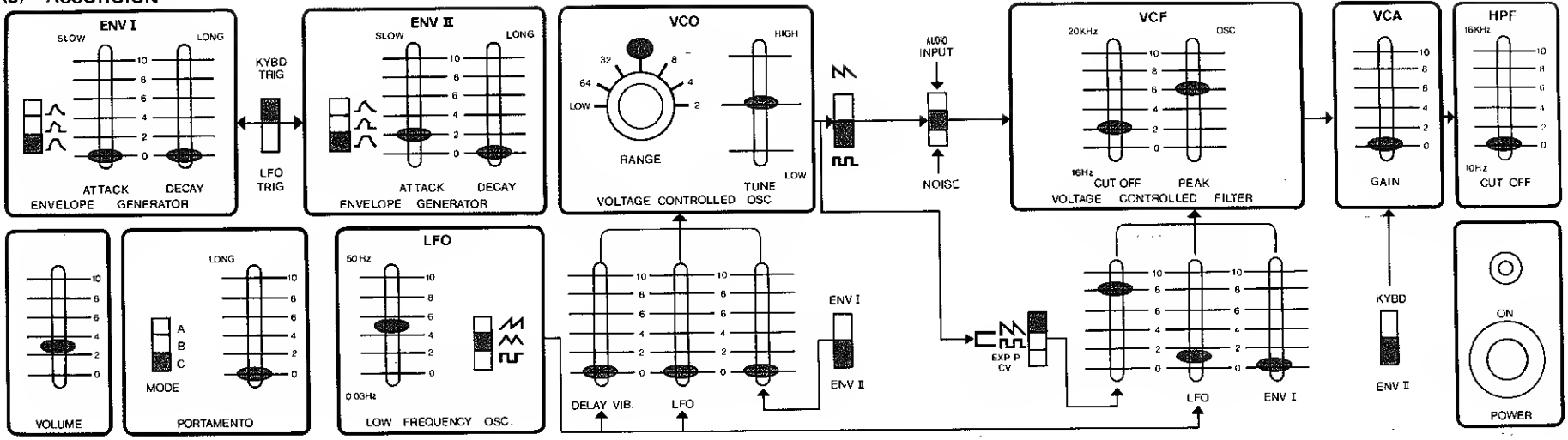

(4) VIOLIN

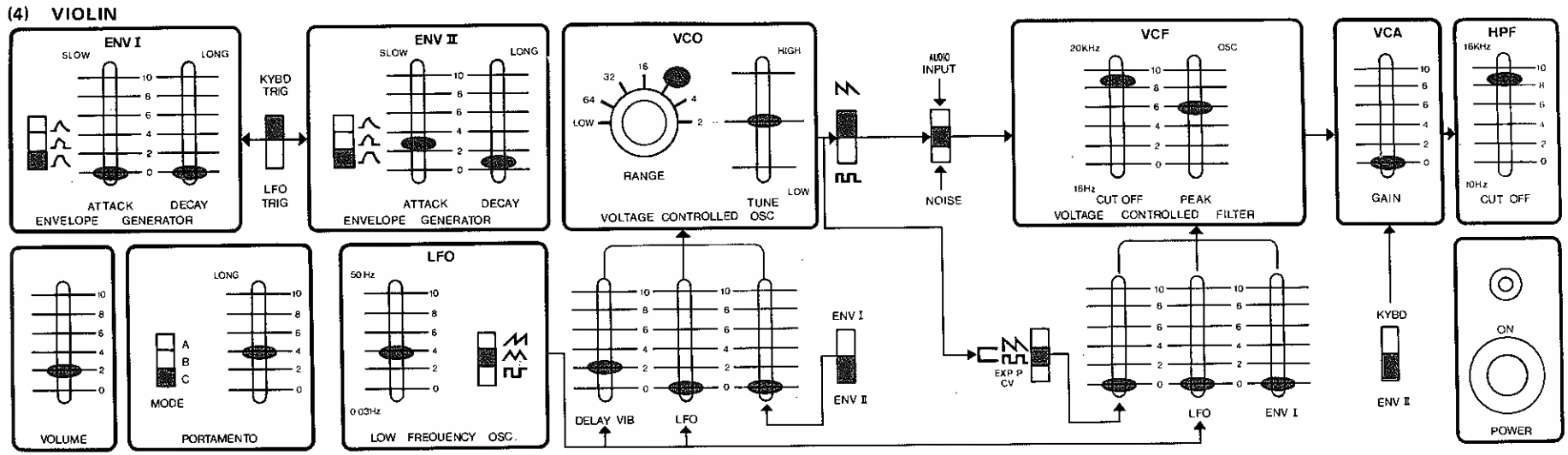

(5) GLOCKEN-SPIEL

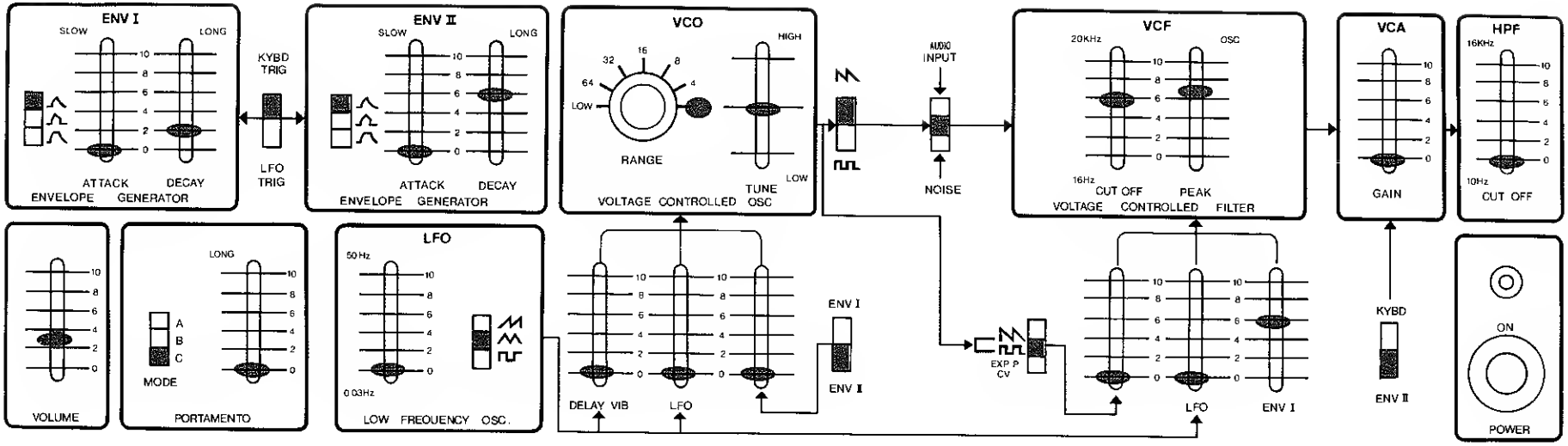

(6) WIND (Key F_2)

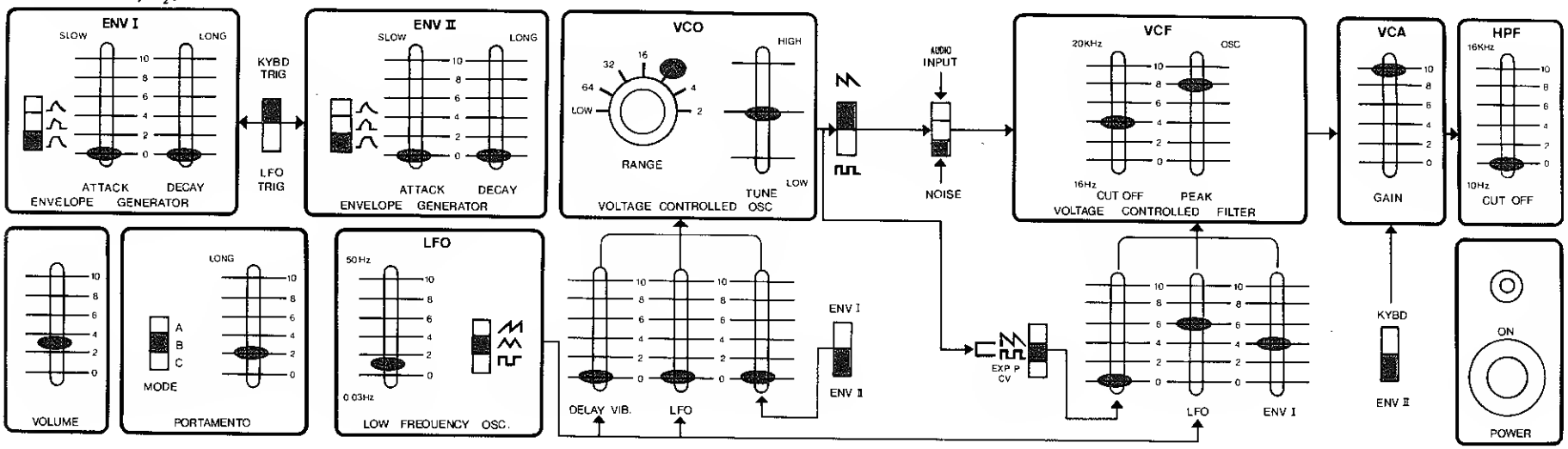

(7) CATS CRY (Key F_2)

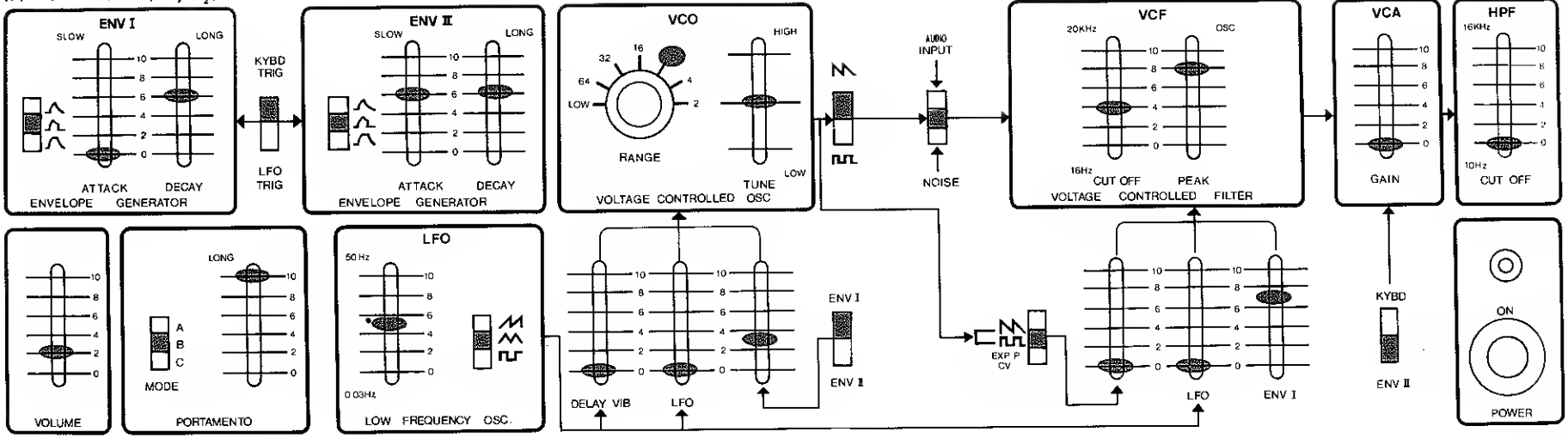

(8) SIREN (Key F_2)

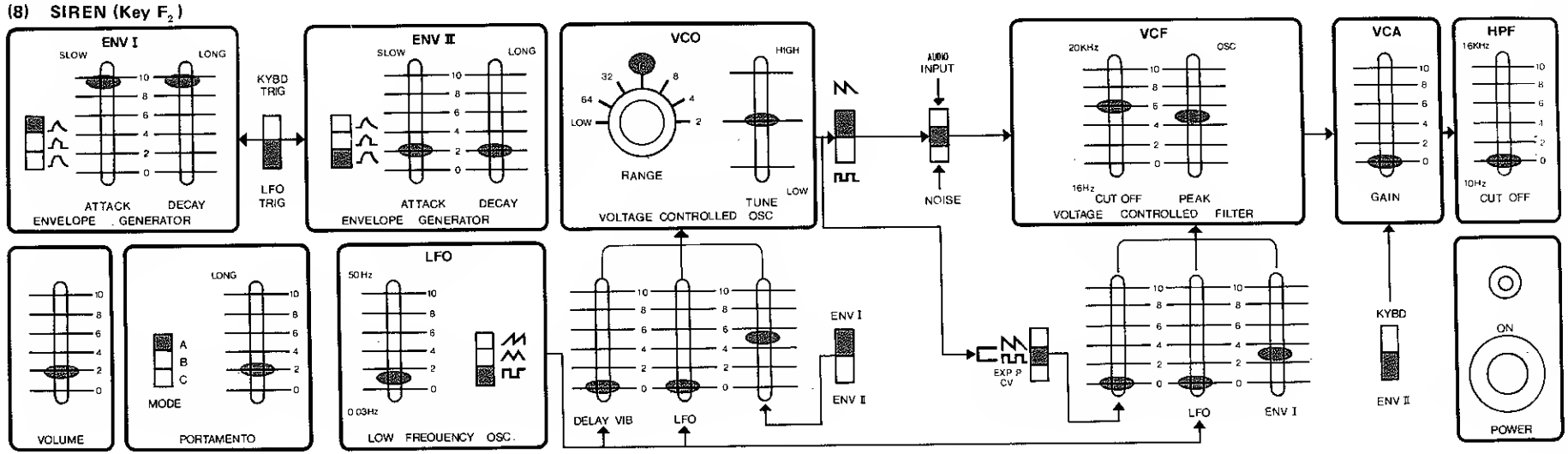

(9) LOCOMOTIVE (Key F_2)

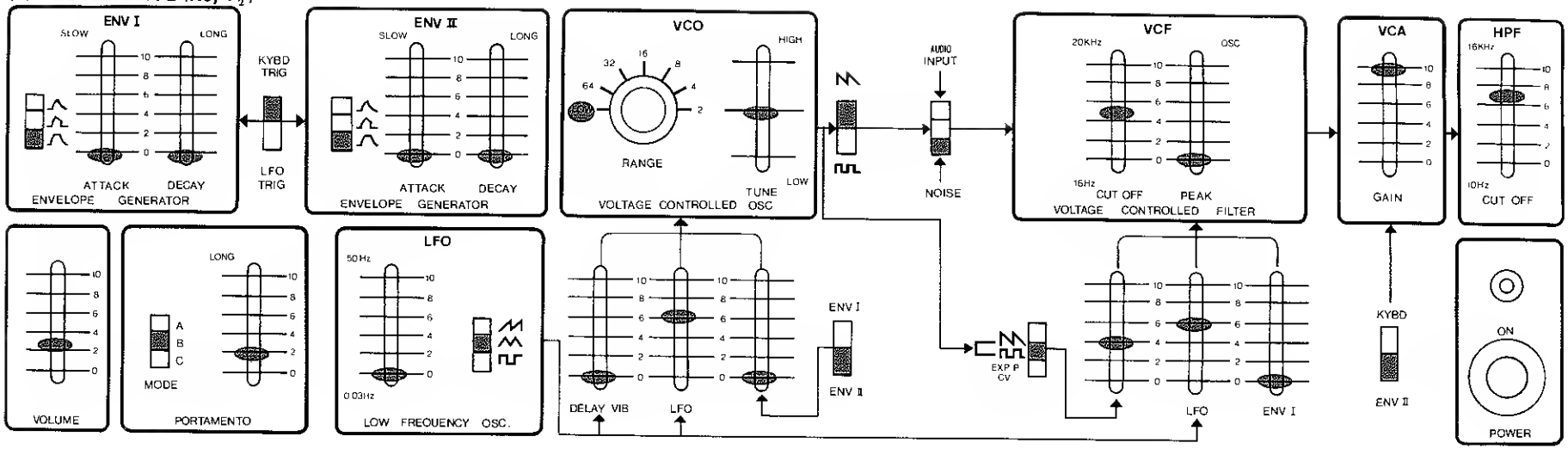

(10) MOTORBICYCLE

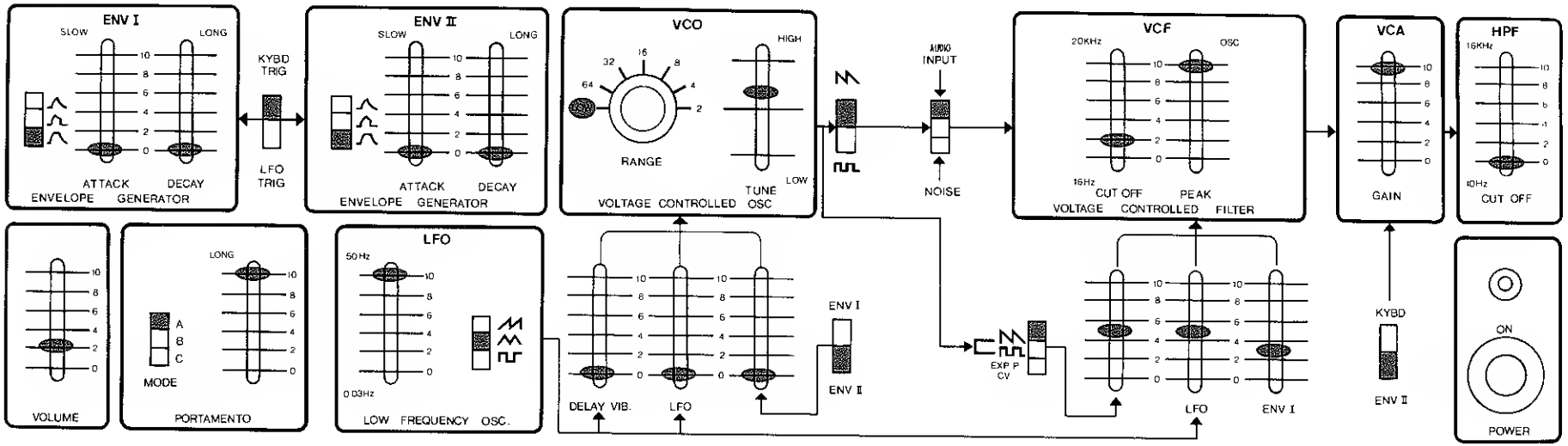

7. Specifications

- **Keyboard** — 37 keys (C-C)
- **Sound Source**
  - ▸ VCO
    - Pitch Range: LOW, 64', 32', 16', 8', 4', 2'
    - Tuning Controller: TUNE
    - Waveform Selector: ⋀/⊓
    - VCO Controller: Delay Vib, LFO, ENV I / ENV II
  - ▸ Noise
  - ▸ Selector: AUDIO INPUT, VCO, NOISE
- **Sound Timbre**
  - ▸ VCF
    - VCF Controller: CUT OFF, PEAK
    - VCF Control Selector: ⋀/⊓/Exp. P. CV, LFO, ENV I
  - ▸ **HPF**
    - HPF Controller: CUT OFF
- **Volume**
  - ▸ VCA
    - VCA Controller: GAIN
    - VCA Control Selector: KYBD/ENV II
  - ▸ **Volume** — VOLUME
- **Envelope Generator**
  - ▸ ENV I
    - Envelope Selector: ⌒ / ⌒ / ⌒
    - Envelope Controller: ATTACK, DECAY
  - ▸ ENV II
    - Same as ENV I
  - ▸ Envelope Trigger Selector: KYBD TRIG/LFO TRIG
- **LFO**
  - ▸ Frequency Controller
  - ▸ Waveform Selector: ⩘ / ⩘ / ⊓
- **Portamento**
  - ▸ Mode Selector: A/B/C
  - ▸ Portamento Controller
- **Rear Panel**
  - ▸ Audio Jack: AUDIO IN, HIGH OUTPUT, LOW OUTPUT
  - ▸ Synthesizer Control Jack: IN, UPPER OUT, LOWER OUT
  - ▸ Expression Pedal Jack: EXP. PEDAL
- **Others** — POWER SW., PILOT LAMP
- **Dimension and Weight** — 545cm(W)x345cm(D)x150cm(H), 6.7kg
- **Power Consumption** — 2W

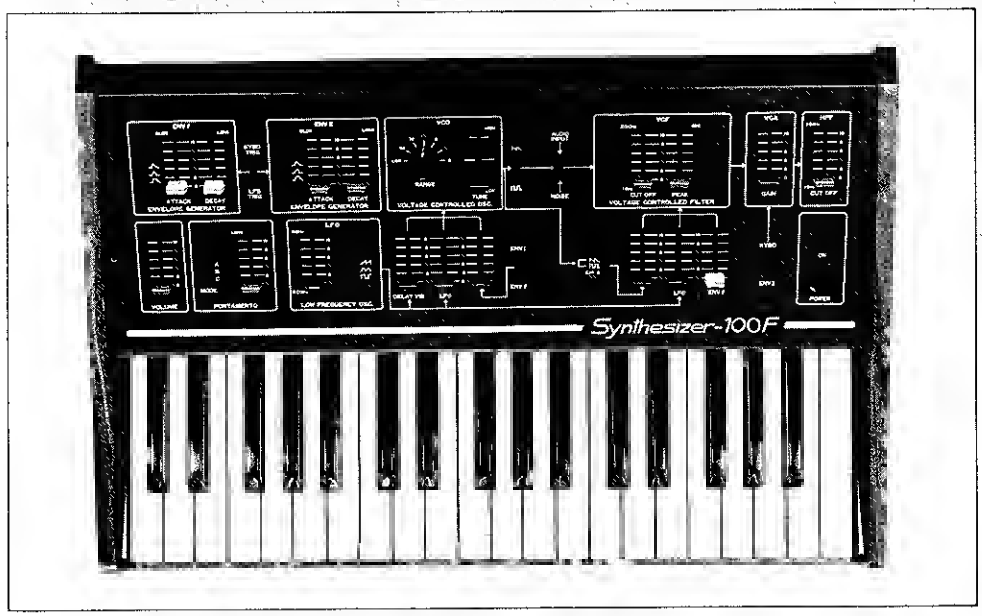

8. Index

A
ADSR 3
ATTACK 3
AUDIO IN 4
AUDIO INPUT 5

C
CUT OFF 7

D
DECAY 3
DELAY VIB. 6

E
ENVELOPE GENERATOR ..... 3、8
(ENV I, ENV II) 3
EXP. PEDAL ..... 7、18
EXP. P CV ..... 7、18

G
GAIN 8

H
HIGH OUT 4
HIGH PASS FILTER (HPF) ..... 3、7

K
KYBD 8
KYBD TRIG 10

L
LOW FREQUENCY OSC(LFO) ..... 3、6、8
LOW OUT 4
LOWER OUT 18

M
MODE 6

N
NOISE 5

P
PEAK 7
PORTAMENTO 6

R
RANGE 4
RELEASE 3

S
SUSTAIN 3

T
TUNE 4

U
UPPER OUT 18

V
VOLTAGE CONTROLLED
AMPLIFIER(VCA) ..... 3、8
VOLTAGE CONTROLLED FILTER(VCF) ..... 3、7
VOLTAGE CONTROLLED OSC(VCO) ..... 3、4
VOLUME 3

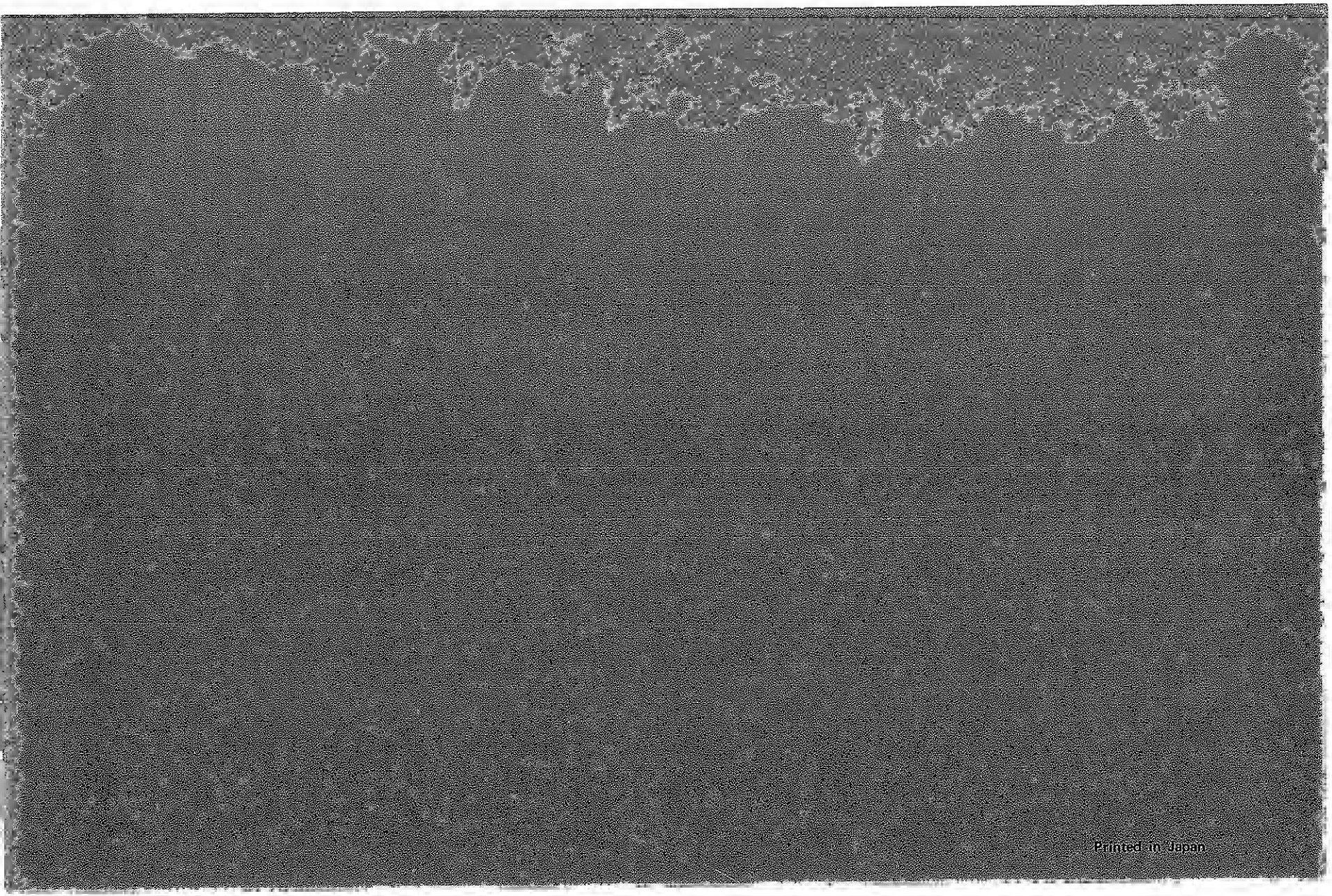
Printed in Japan